To assemble rooms of house, first match arches with corresponding number on house sections. There will be two arches marked 1 that will go with the two house sections marked 1, and two arches marked 2 to go with house sections marked 2. The numbers are located on peak of arch and bottom of house section.

9. Insert arch pegs into holes in front of house section. (ILL. 10) Push arch and house section together fitting long tab of house into groove behind arch. (ILL. 11) Repeat this procedure for all four house sections.

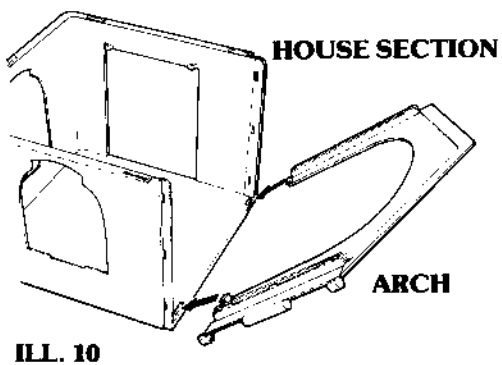

ILL. 10

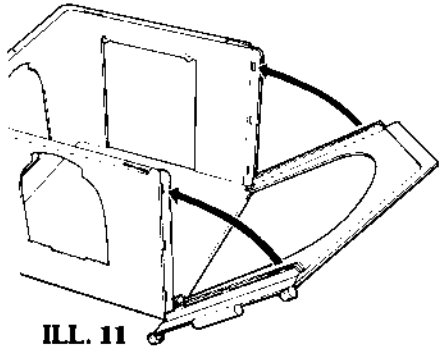

ILL. 11

10. Place window just below opening on wall and slide it upward locking the top in place. Swing bottom of window into opening until it latches. (ILL. 12) Repeat this procedure for all windows.

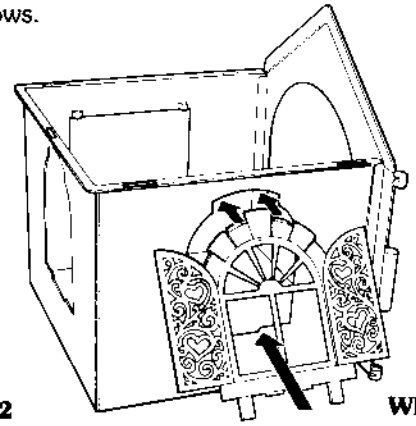

ILL. 12

11. Remove pieces of ceiling fan from runner frame. Press other half of ball to fan rod. (ILL. 13) Insert fan rod into slot on decorated side of fan. (ILL. 14) Spin fan down rod until it rests on ball. Insert rod into tab under roof. (ILL. 15)

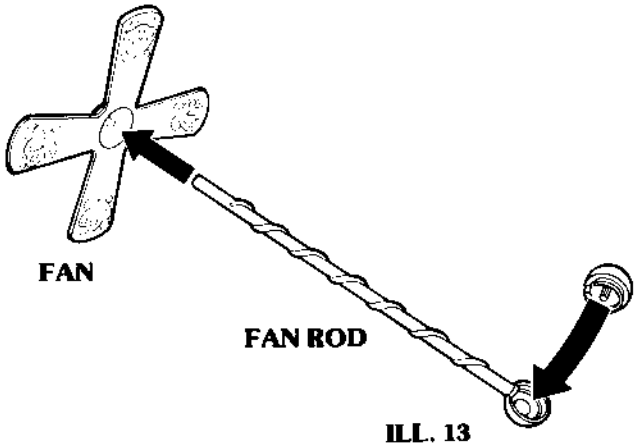

ILL. 13

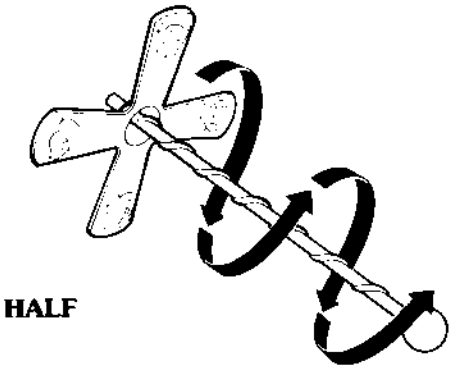

ILL. 14

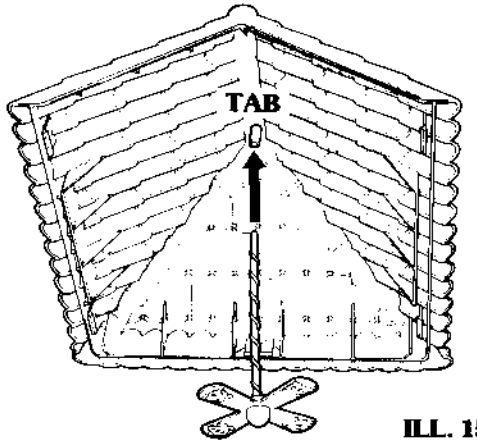

ILL. 15
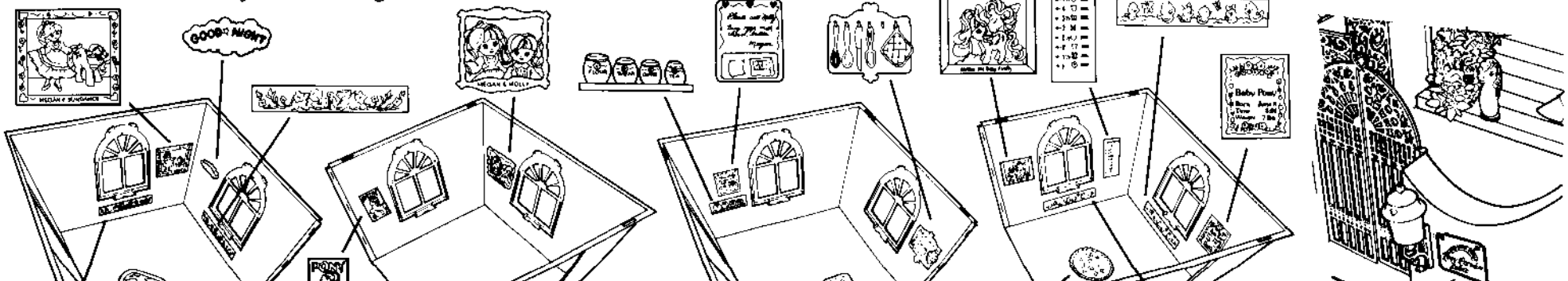
12. Peel and apply labels in rooms as shown. (ILL. 16) It is recommended that you place the carpet stickers on the floor *after* you have arranged the furniture around the house.